THIS DOCUMENT IS THE PROPERTY OF KEYSTONE ELECTRONICS CORP. AND SHALL NOT BE REPRODUCED, DISTRIBUTED OR USED AS A BASIS FOR MANUFACTURE WITHOUT PRIOR WRITTEN PERMISSION FROM KEYSTONE ELECTRONICS CORP.

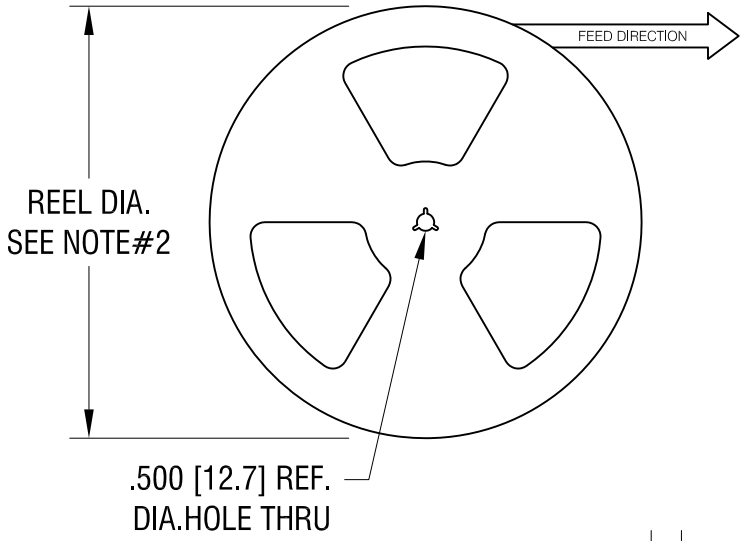

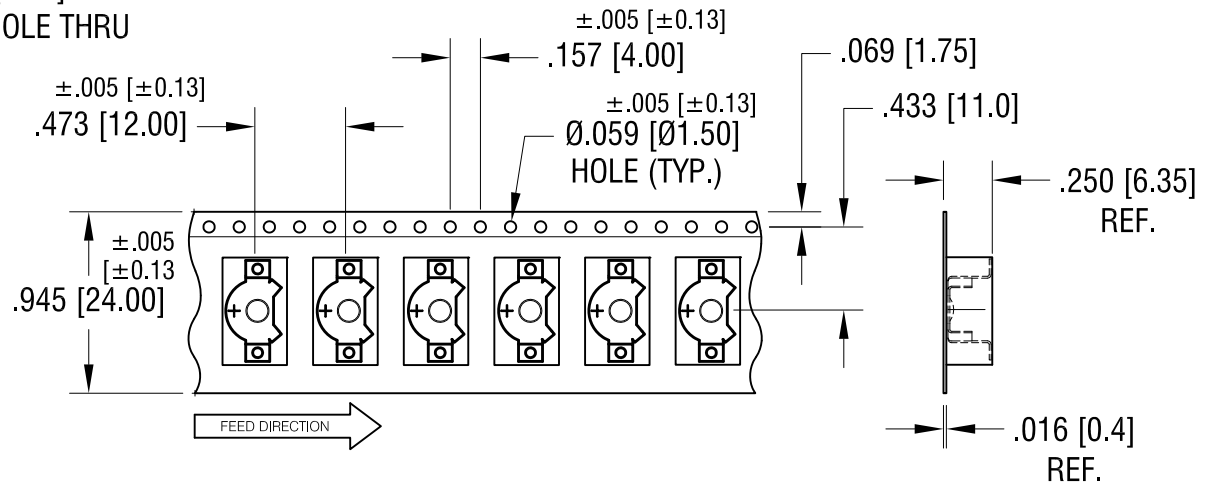

NOTES:

TAPE AND REEL SPECIFICATIONS:

1. TAPE:
   MAT'L - ALL CONDUCTIVE POLYSTYRENE CARRIER
   ANSI/EIA-481 STANDARD
2. REEL:
   13.0 [330.2] DIA. 800 PIECES OF
   PART NO. 2988 REV.D PER REEL.

DATE	DESCRIPTION	REV.
2.29.24	NO CHANGES TO PART	B
3.07.12	CHANGE AS PER ECN 12.031	A

KEYSTONE ELECTRONICS CORP.

www.keyelco.com • NEW HYDE PARK NY 11040 • Tel (516)328-7500

PART NAME: HEARING AID BATTERY ON TAPE & REEL			
MATERIAL: AS NOTED			
FINISH: AS NOTED	DRN BY: NT	DATE: 1.14.10	
	APP'D: MR	SCALE: X	
TOLERANCES INCH [MM] DECIMAL ± .015 [± 0.38] ANGULAR ± 1° UNLESS OTHERWISE SPECIFIED	CODE: C	DWG NO.: 2988TR	