DATE	DESCRIPTION	REV.
12.21.09	CHANGE AS PER ECN 09–192	A
12.05.14	CHANGE AS PER ECN 14–119 (B1) WAS 4.50mm	B
8.30.17	ECN 17–055, ADD INSULATOR COLOR (C1) WAS .240 [6.10]	C

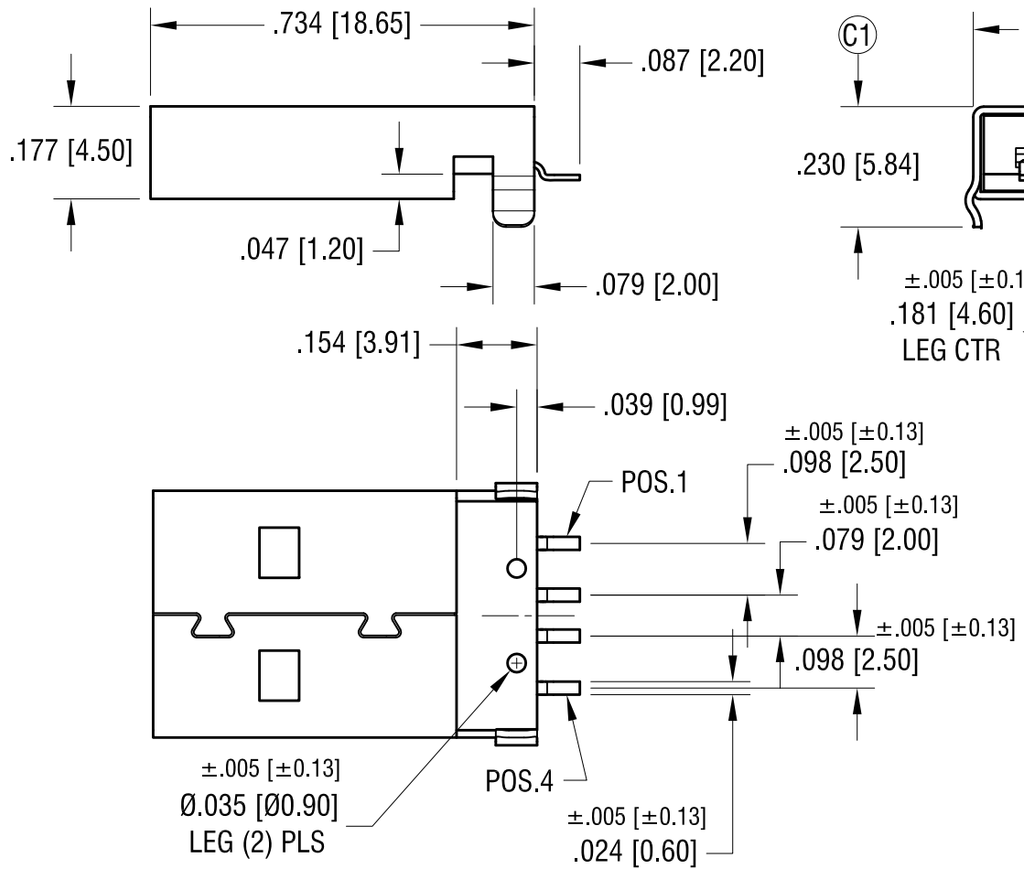

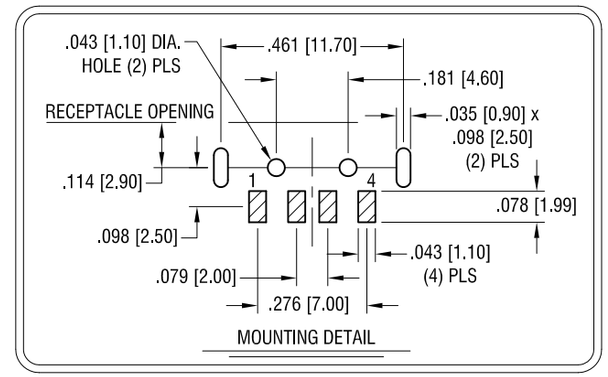

Notes:

Materiall:
- Shell: Steel, Nickel Plate.
- Insulator: Glass Filled LCP (black color)
- Contacts: Phosphor Bronze

Finish:
- Contact Area: Gold Plate over Nickel Plate
- on Solder Tail: Tin Plate over Nickel Plate

Electrical Specifications
- Rated Voltage: 30V AC (rms)
- Contact Current Rating: 1 A max.
- Contact Resistance: 30 milliohms Max.
- Dielectric Withstanding: 500V AC
- Operating Temperature: -20°C to 85°C

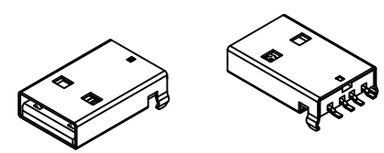

ACTUAL SIZE

THIS DOCUMENT IS THE PROPERTY OF KEYSTONE ELECTRONICS CORP. AND SHALL NOT BE REPRODUCED, DISTRIBUTED OR USED AS A BASIS FOR MANUFACTURE WITHOUT PRIOR WRITTEN PERMISSION FROM KEYSTONE ELECTRONICS CORP.

KEYSTONE ELECTRONICS CORP.
www.keyelco.com • ASTORIA, N.Y. 11105-2017 • Tel (718) 956-8900

PART NAME: USB A-TYPE HORIZONTAL SMT PLUG

MATERIAL: AS NOTED

FINISH: AS NOTED

DRN BY: BOONE | DATE: 6.13.06

APP'D: LN | SCALE: 3x

TOLERANCES: INCH [MM]
DECIMAL ± .010 [± 0.25]
ANGULAR ± 1°
UNLESS OTHERWISE SPECIFIED

CODE: C

DWG NO. 931