| DATE | DESCRIPTION | REV. |
|---|---|---|
| 5.23.11 | CHANGE AS PER ECN 11-067 | A |

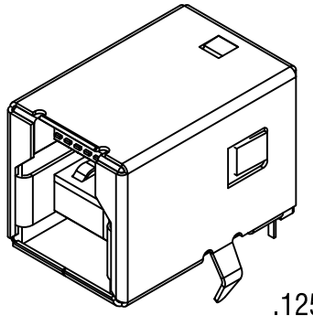

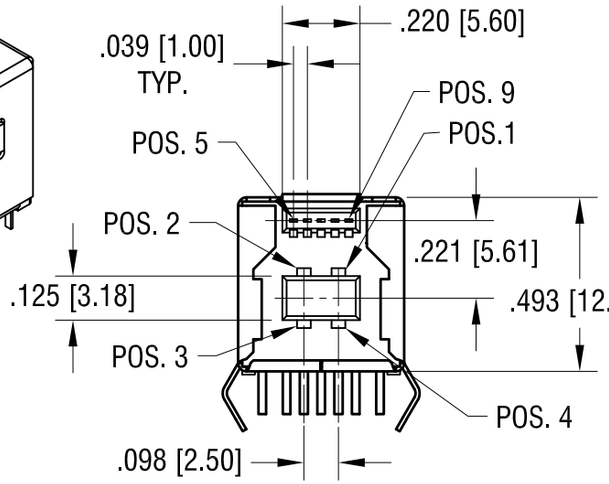


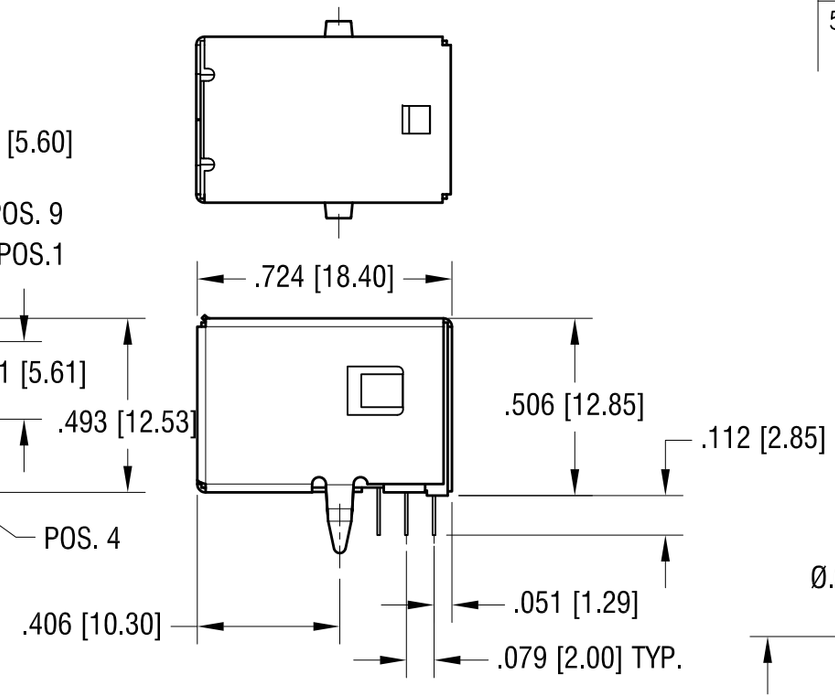


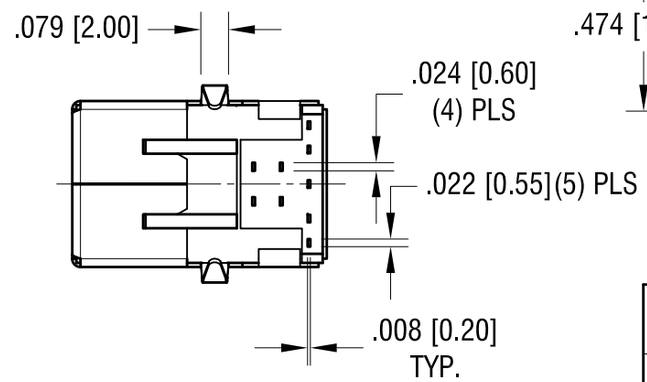


SB3.0 'B' RECEPTACLE FOOTPRINT

TOLERANCE ±.002 [±0.05]

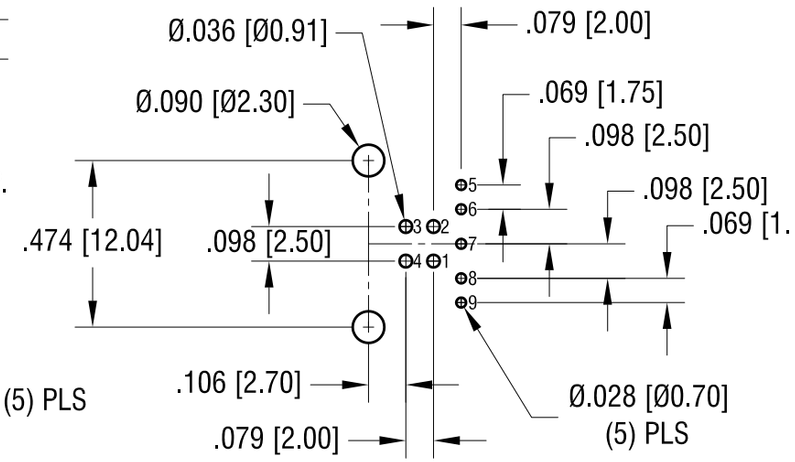


SOCKET SPECIFICATIONS:

SHELL: MAT'L- PHOSPHOR BRONZE

CONTACT: MAT'L- PHOSPHOR BRONZE

INSULATION: MAT'L- THERMOPLASTIC, UL 94V-0

FINISH- GOLD FLASH OVER NICKEL ON CONTACT AREA

TIN OVER NICKEL ON SOLDER TAILS

ELECTRICAL CHARACTERISTICS:

RATED VOLTAGE: 30V (RMS)

CONTACT CURRENT RATING: 1 Amp DC MAX.

CONTACT RESISTANCE: 15m Ω min.

DIELECTRIC WITHSTANDING VOLTAGE: 750V AC FOR 1 MINUTE

MECHANICAL CHARACTERISTICS:

OPERATING TEMPERATURE: -13°F (-25°C) TO 176°F (+80°C)

DURABILITY: 1500 CYCLES MIN.

THIS DOCUMENT IS THE PROPERTY OF KEYSTONE ELECTRONICS CORP. AND SHALL NOT BE REPRODUCED, DISTRIBUTED OR USED AS A BASIS FOR MANUFACTURE WITHOUT PRIOR WRITTEN PERMISSION FROM KEYSTONE ELECTRONICS CORP.

**KEYSTONE ELECTRONICS CORP.**

www.keyelco.com • ASTORIA, N.Y. 11105-2017 • Tel (718) 956-8900

| | | | |
|---|---|---|---|
| PART NAME: USB 3.0 TYPE B | | | |
| MATERIAL: AS NOTED | | | |
| FINISH: AS NOTED | DRN BY: NT | DATE: 4.9.10 | |
| | APP'D: LN | SCALE: 2X | |
| TOLERANCES INCH [MM]<br>DECIMAL ± .010 [± 0.25 ]<br>ANGULAR ± 1°<br>UNLESS OTHERWISE SPECIFIED | CODE: C/M | DWG NO.: 950 | |